STEW 2016

Model-based Development for Vehicular Embedded Systems

Alessio Bucaioni

13-10-2016

Arcticus Systems

Vetenskapsrådet

KK-stiftelsen

MODEL-BASED ENGINEERING OF EMBEDDED SYSTEMS (MEES) RESEARCH GROUP

Born in 2011 as a spin-off from the ”Real-Time System Design” group

15 members

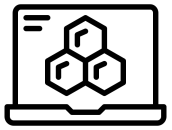

2 main research areas

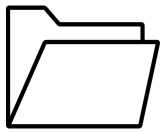

16 research projects

MEES RESEARCH PRODUCTION

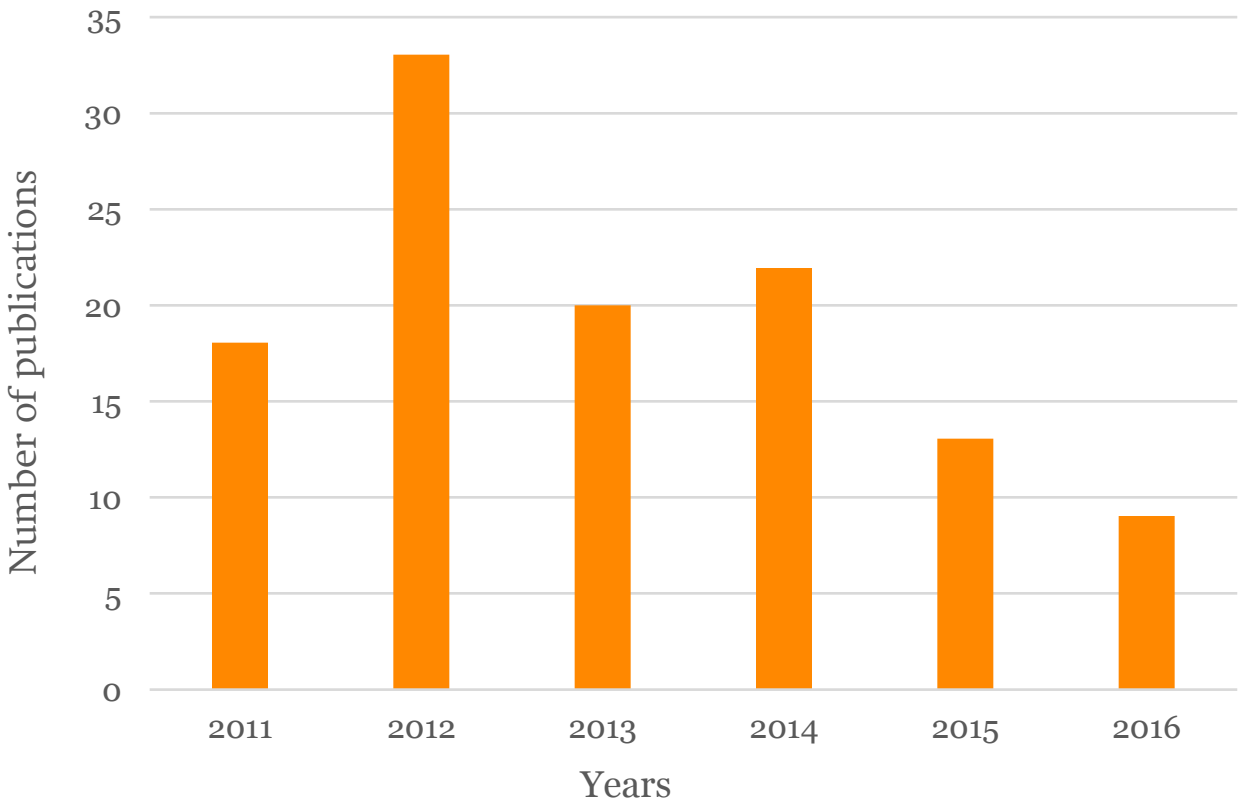

MEES INDUSTRIAL PARTNERS

Arcticus Systems

ABB

SAAB

Hök INSTRUMENT AB

VOLVO

ERICSSON

BAE SYSTEMS
INSPIRED WORK

SWEDISH ICT SICS

BOMBARDIER
the evolution of mobility

BRUHNSPACE™

ALTEN SVERIGE

ENEA

XDIN
AN ALTEN COMPANY

maximatecc

UNIBAP

MÄLARDALEN UNIVERSITY
SWEDEN

VEHICULAR EMBEDDED SYSTEMS

Courtesy of www.volvo.com

BACKGROUND – VEHICULAR EMBEDDED SYSTEMS

Courtesy of www.volvo.com

BACKGROUND - VEHICULAR EMBEDDED SYSTEMS

"More than 80 percent of vehicle innovation comes from embedded systems"

- MANFRED BROY

Professor of informatics at Technical University, Munich

BACKGROUND - VEHICULAR EMBEDDED SYSTEMS

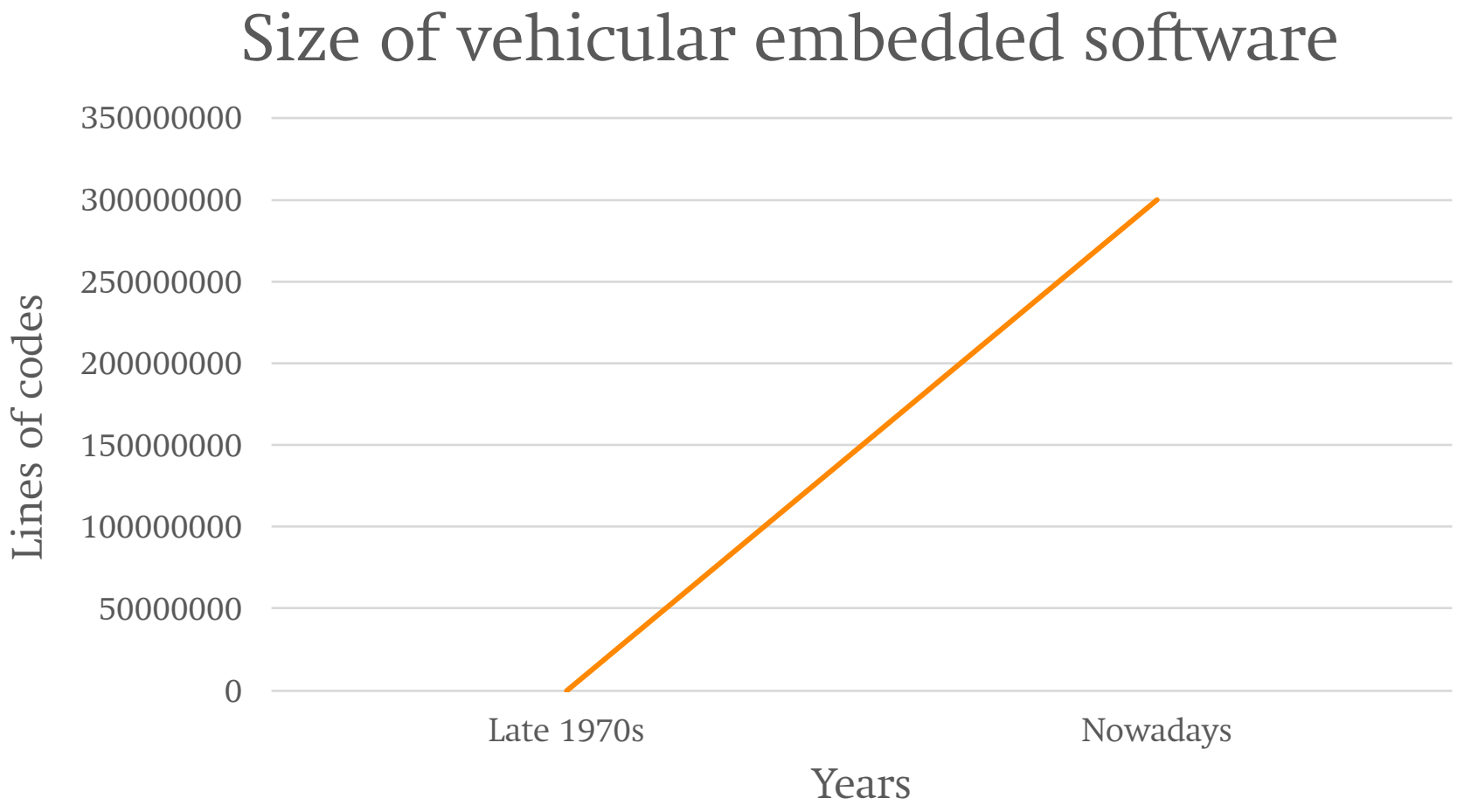

BACKGROUND - VEHICULAR EMBEDDED SYSTEMS

…but **size** is only one **dimension** of complexity

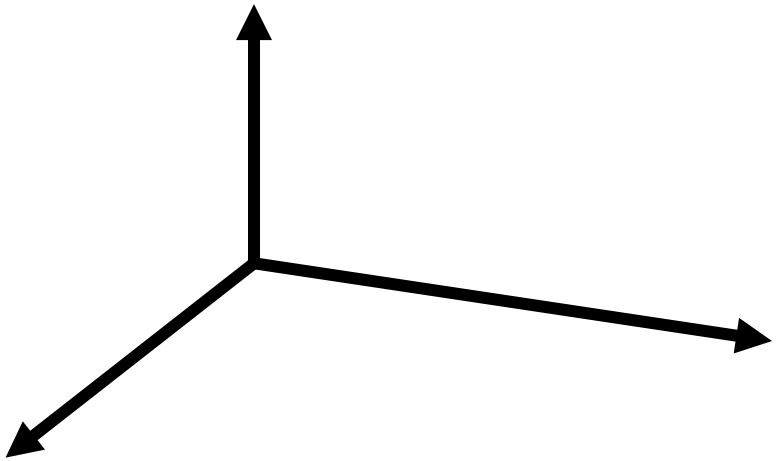

BACKGROUND - VEHICULAR EMBEDDED SYSTEMS

Courtesy of www.bmw.com

BACKGROUND - VEHICULAR EMBEDDED SYSTEMS ON MULTICORE

Multi-core platforms

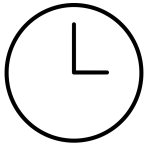

25% longer schedules

3 times as many software engineers

4,5 times more expensive

* *S. Balacco, C.Rommel.* **Next Generation Embedded Hardware Architectures:Driving Onset of Project Delays, Costs Overruns and Software Development Challenges.** Klockwork Inc. 2010.

BACKGROUND - MODEL-DRIVEN ENGINEERING

"As our systems grow in complexity traditional code-centric development methods are becoming intractable"

- **BRAN SELIC**

Father of Real-Time UML

BACKGROUND - MODEL-DRIVEN ENGINEERING

Abstraction +

Automation =

Model-driven Engineering

BACKGROUND – EAST-ADL

BACKGROUND – EAST-ADL

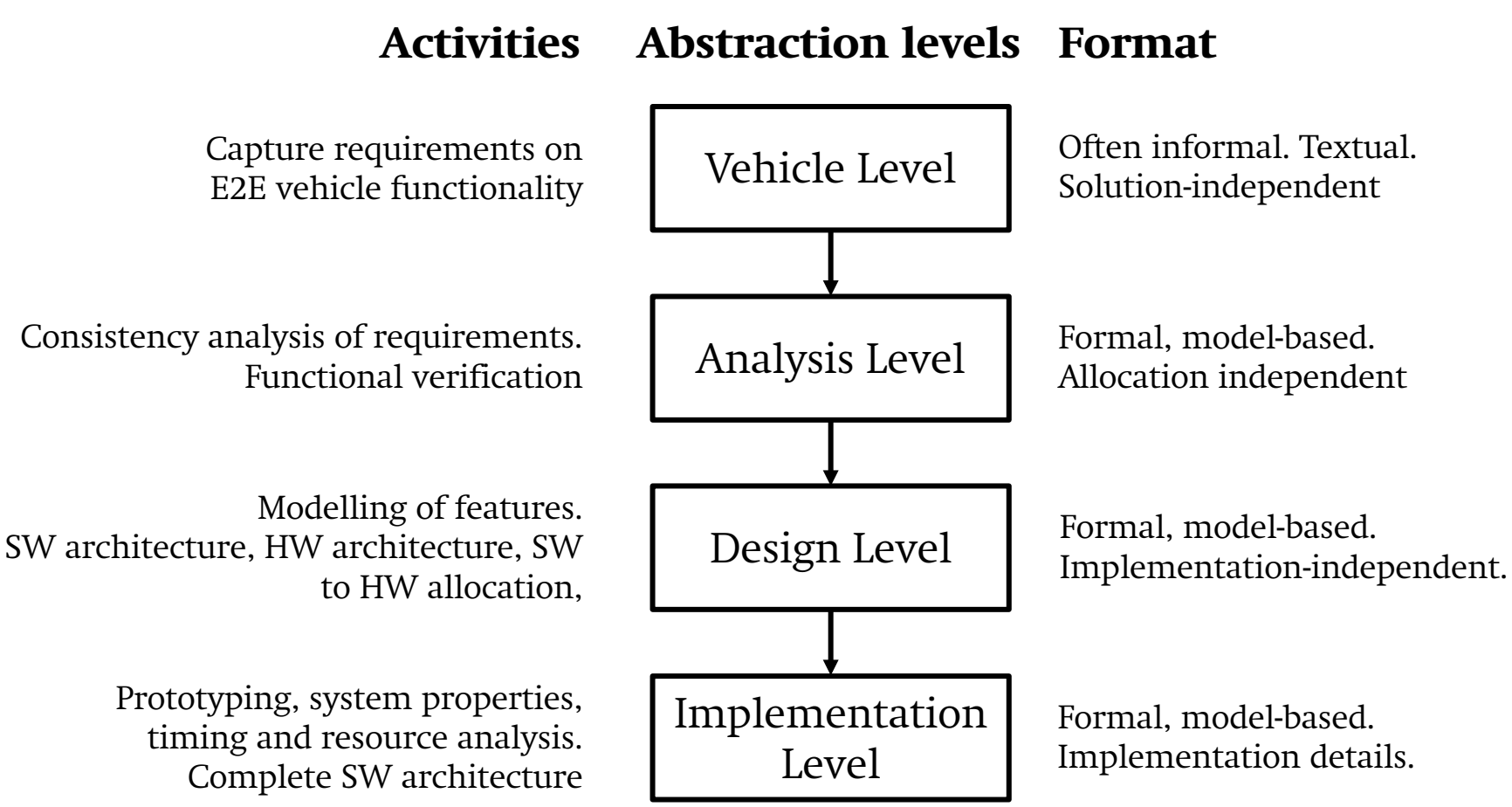

MEES CONTRIBUTIONS

Abstraction levels

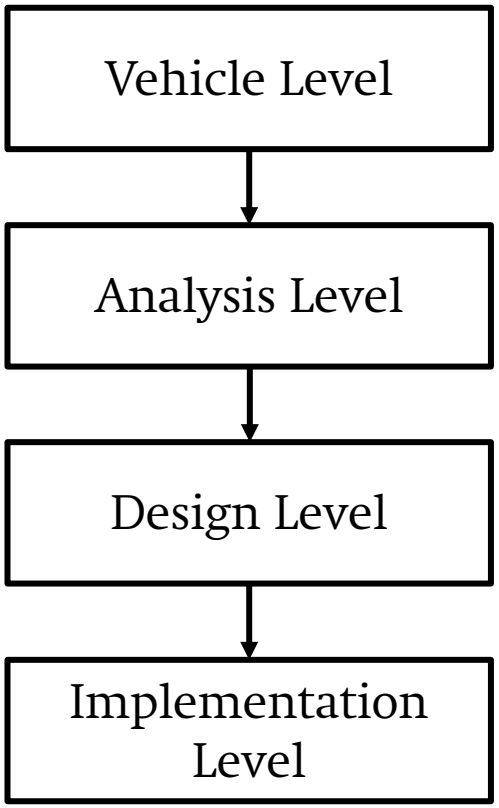

Contribution of the MEES research group

finished contribution | ongoing contribution

RubusEAST and translation of TADL2 constraints

Predictability enabled for legacy nodes

RubusMM extensions for multi-core platforms
Model-based methodology for early predictability
Predictability enabled on design assumptions

Rubus Component Model (RCM)
RCM metamodel definition (RubusMM)
Exact RTA
RTA for CAN and high level protocol, e.g., HCAN, CANopen
E2E response time
E2E delays, e.g., age and delay
Shared stack analysis
Switched ethernet
SWEET benchmark
Extensions for multi-core platforms

PERSONAL CONTIBUTIONS

Abstraction levels

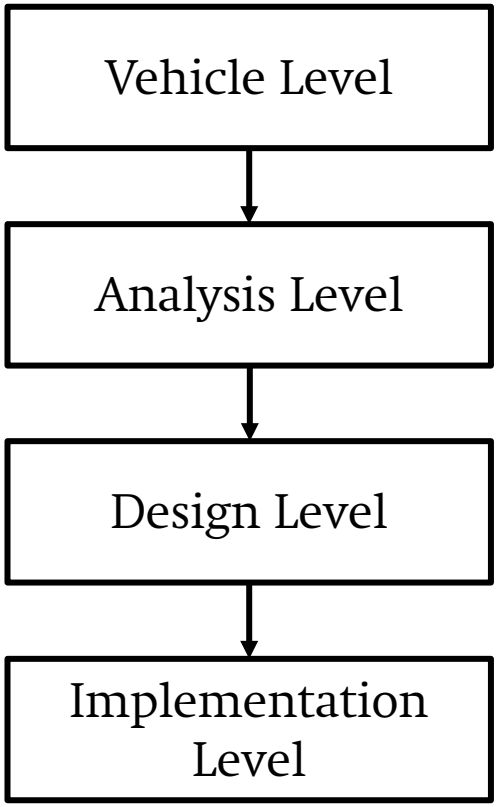

Contribution of the MEES research group

finished contribution

ongoing contribution

RubusEAST and translation of TADL2 constraints

RubusMM extensions for multicore platforms

Model-based methodology for early predictability

RCM metamodel definition (RubusMM)

Extensions for multicore platforms

MY RESEARCH IN A NUTSHELL

Definition of a **model-based** software development **methodology** which supports **early timing analysis** for **vehicular embedded systems on single- and multi-core**.

METHODOLOGY

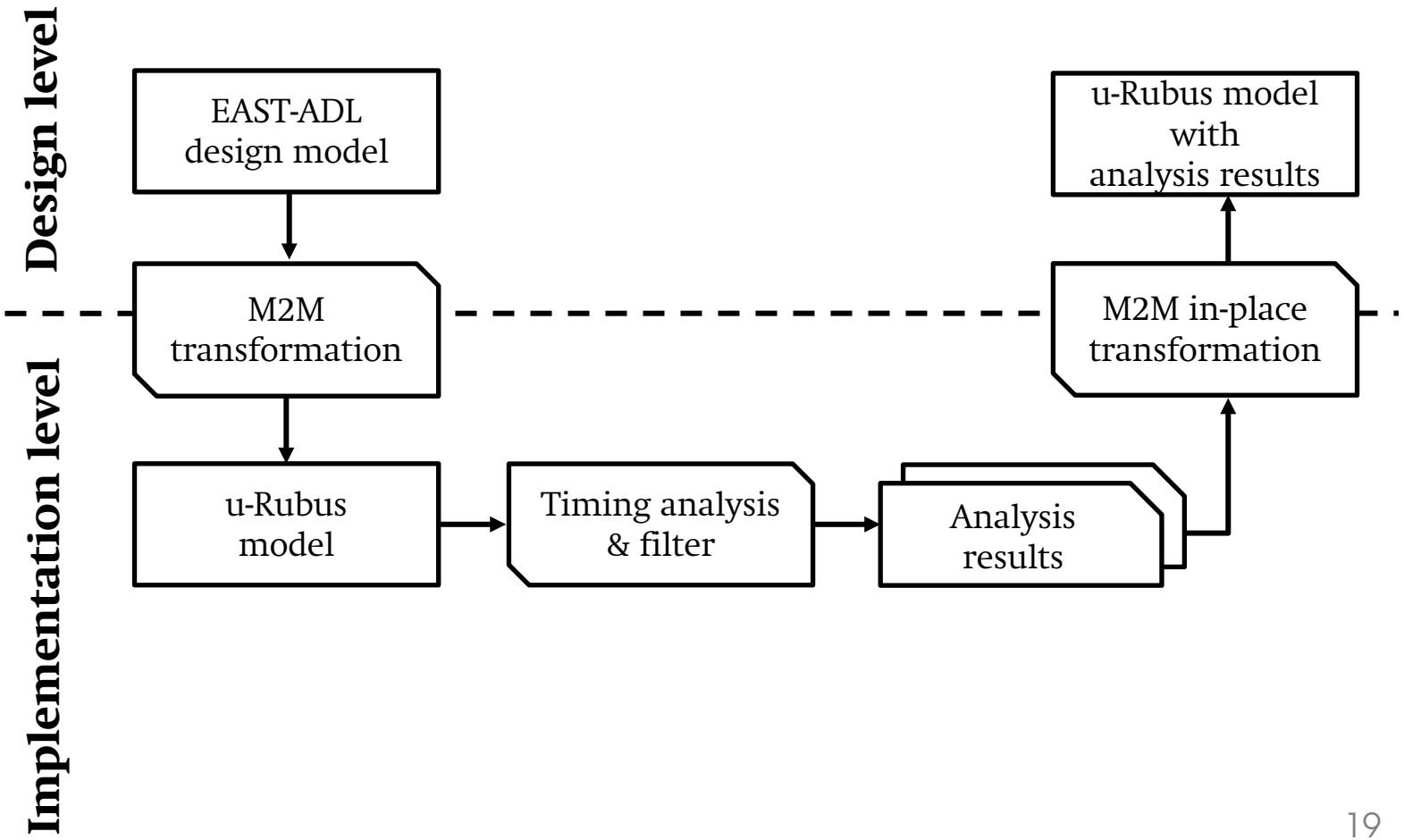

UNIQUENESSES

1. Support for early predictability
   - RubusMM
   - M2M transformation
2. Support for uncertainty
   - u-RubusMM
3. Support for multi-core
   - RubusMM for SW, HW and SW to HW allocation

EARLY PREDICTABILITY AND UNCERTAINTY

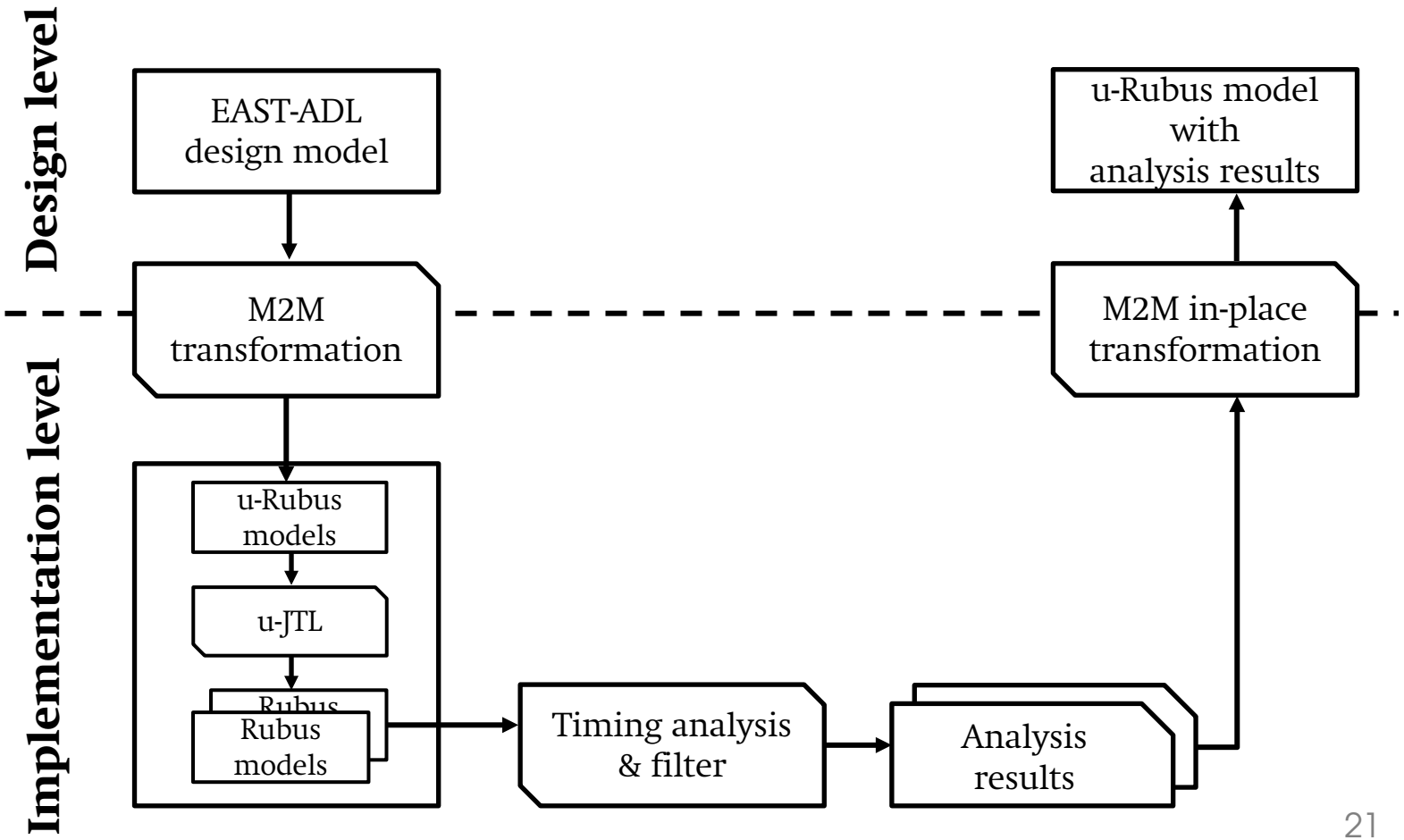

RUNNING EXAMPLE: *Intelligent Parking Assist*

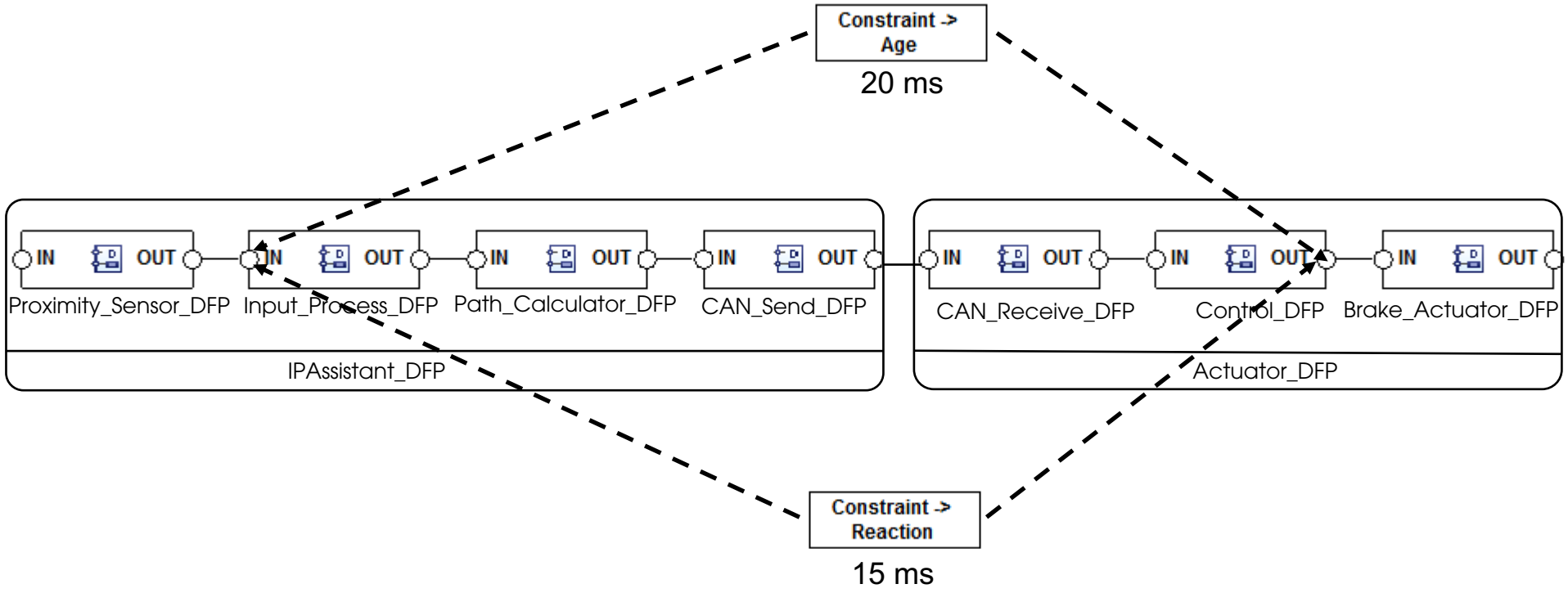

RUNNING EXAMPLE: *Intelligent Parking Assist*

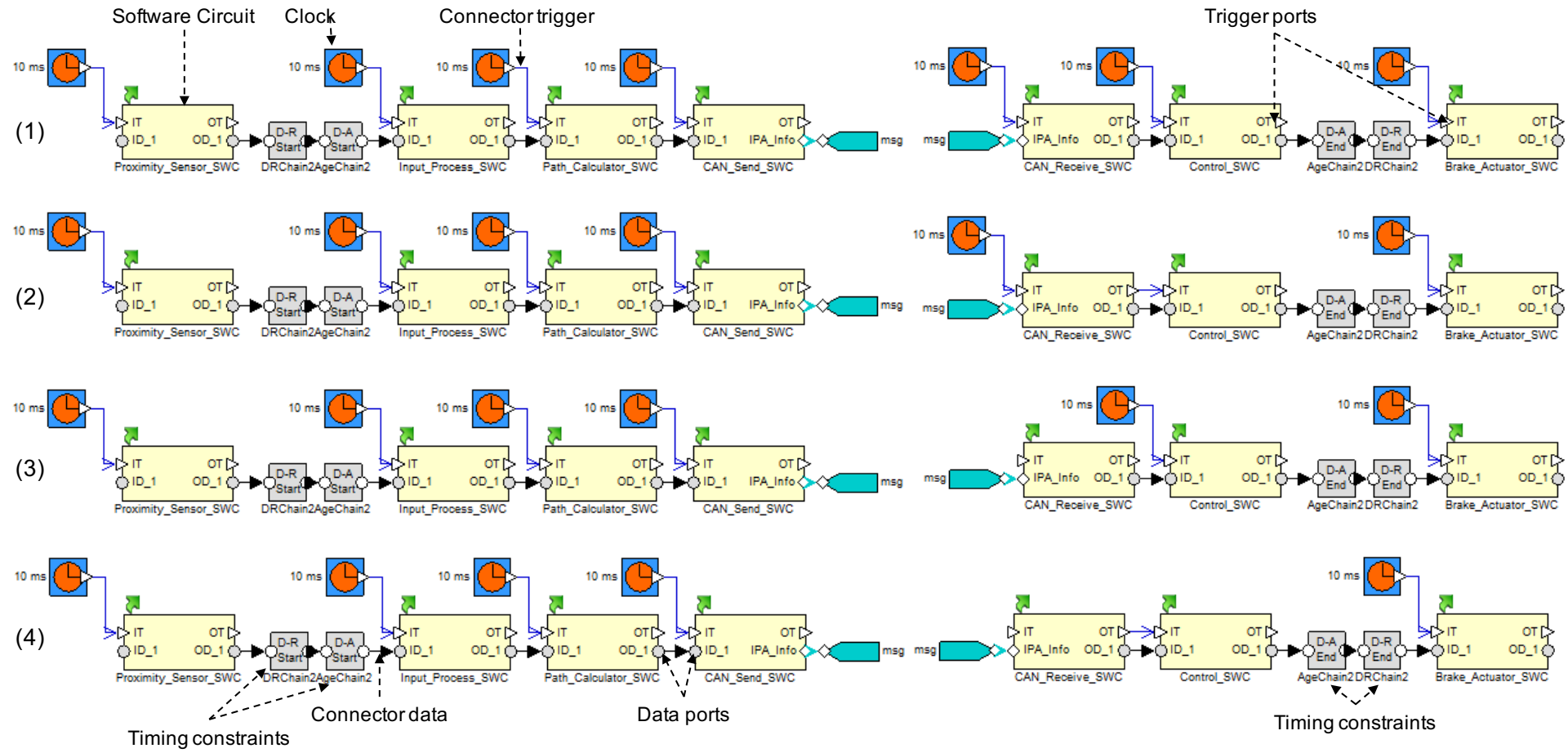

RUNNING EXAMPLE: *Intelligent Parking Assist*

Timing analysis has filtered the solution space. However there are still 14 RCM models to inspect.

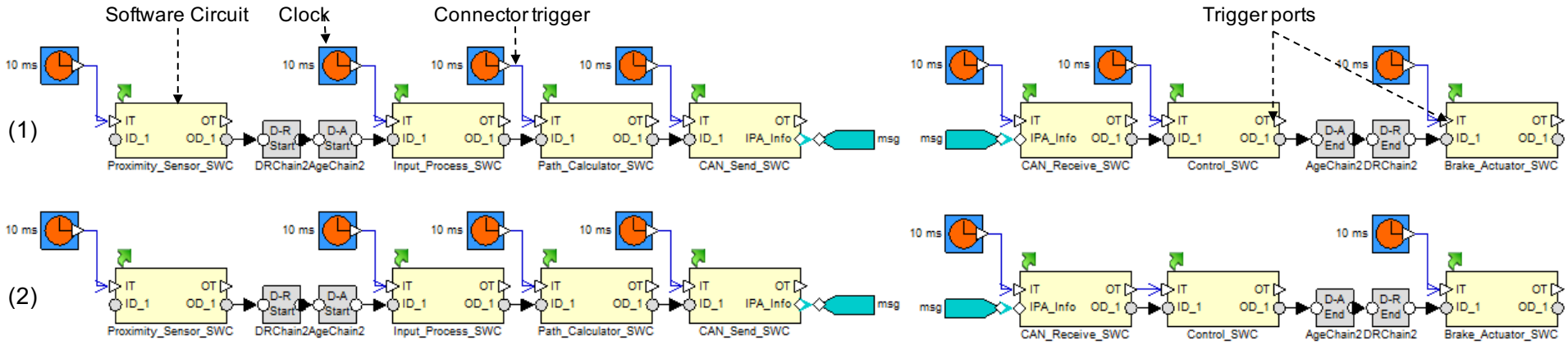

RUNNING EXAMPLE: *Intelligent Parking Assist*

Timing analysis has filtered the solution space.
However there are still 14 RCM models to inspect.

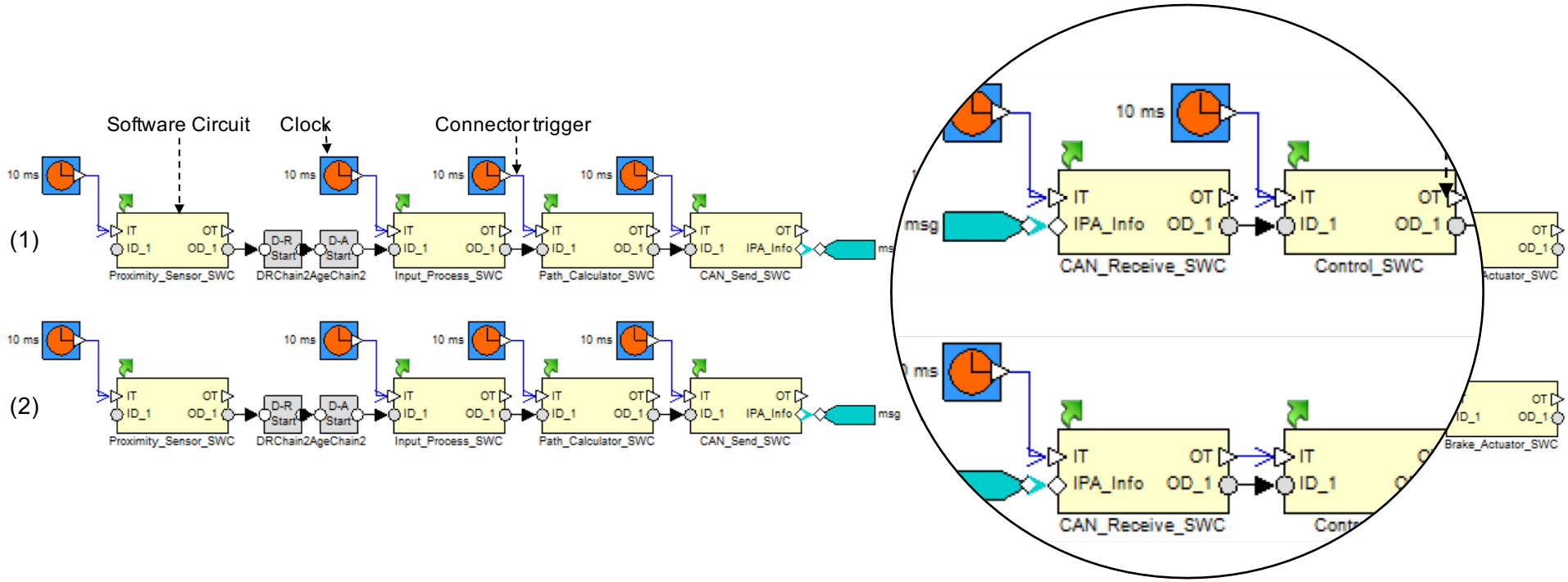

RUNNING EXAMPLE: *Intelligent Parking Assist*

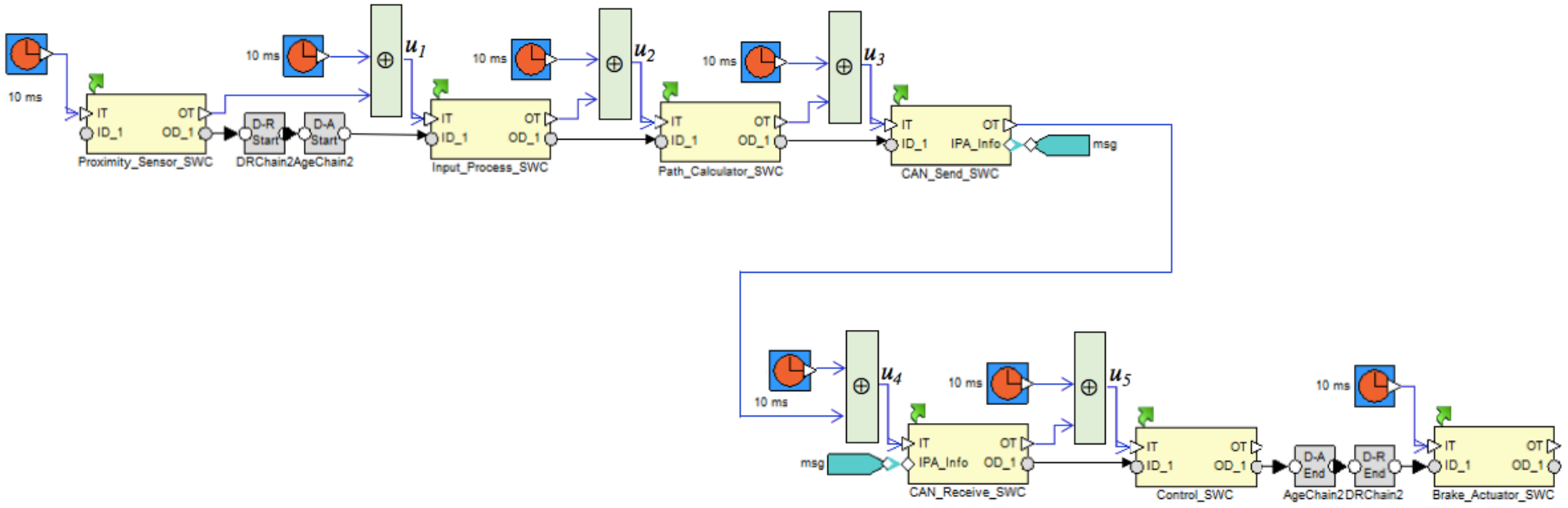

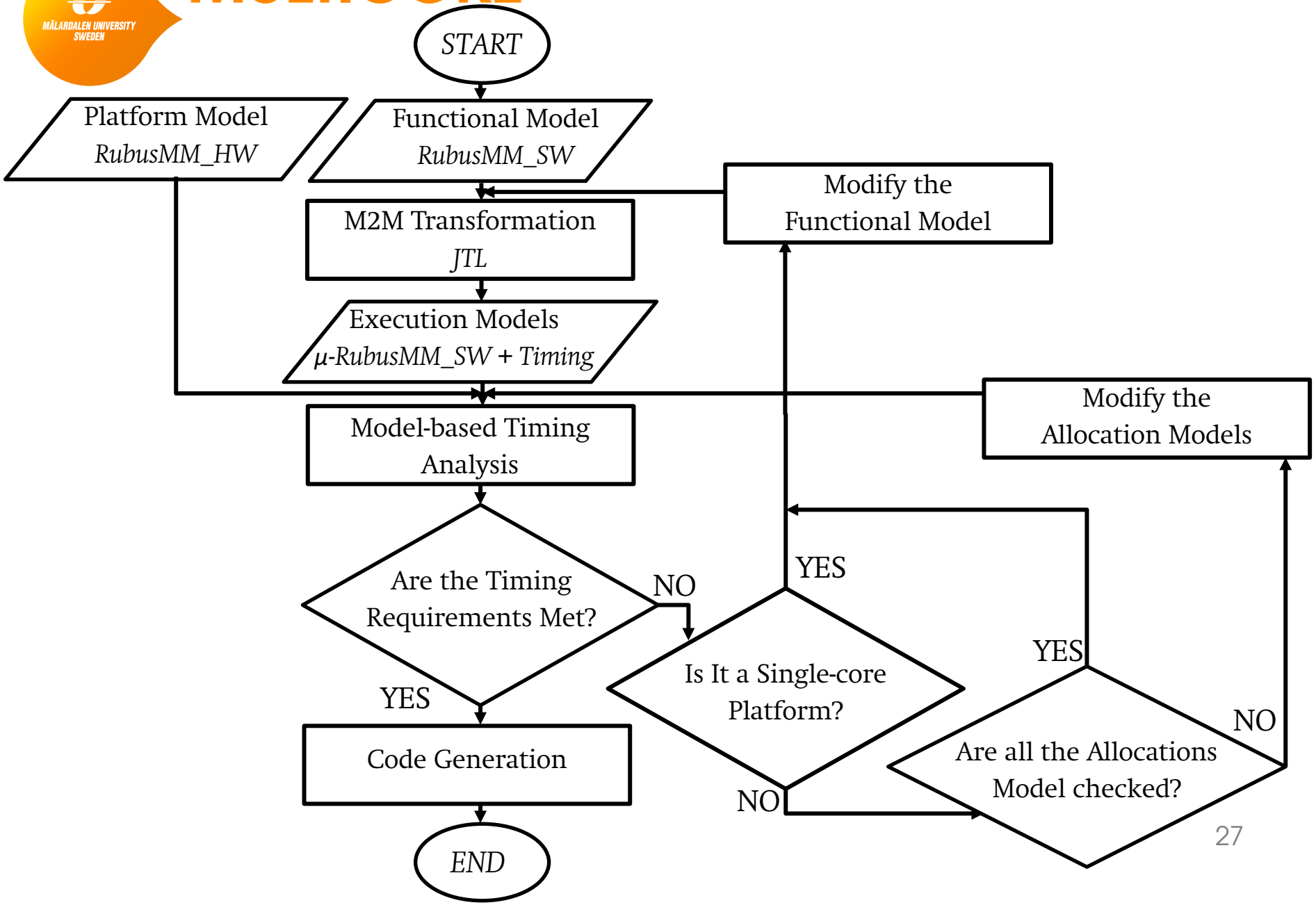
START
Platform Model
RubusMM_HW
Functional Model
RubusMM_SW
M2M Transformation
JTL
Execution Models
μ-RubusMM_SW + Timing
Model-based Timing Analysis
Are the Timing Requirements Met?
NO
YES
Code Generation
END
Modify the Functional Model
Modify the Allocation Models
Is It a Single-core Platform?
YES
NO
Are all the Allocations Model checked?
YES
NO

ACADEMIA-INDUSTRY TRANSFER

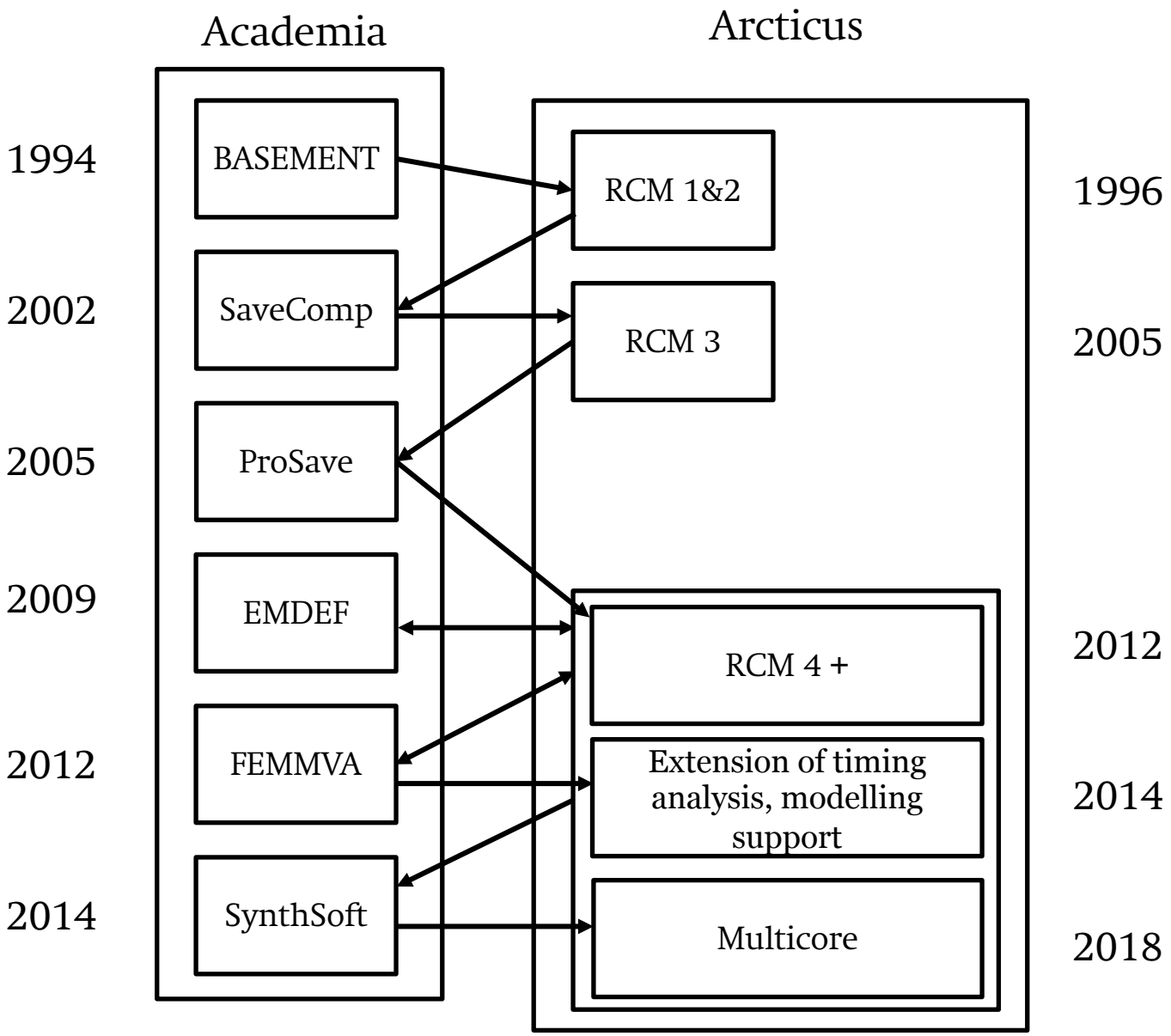

ACADEMIA-INDUSTRY TRANSFER

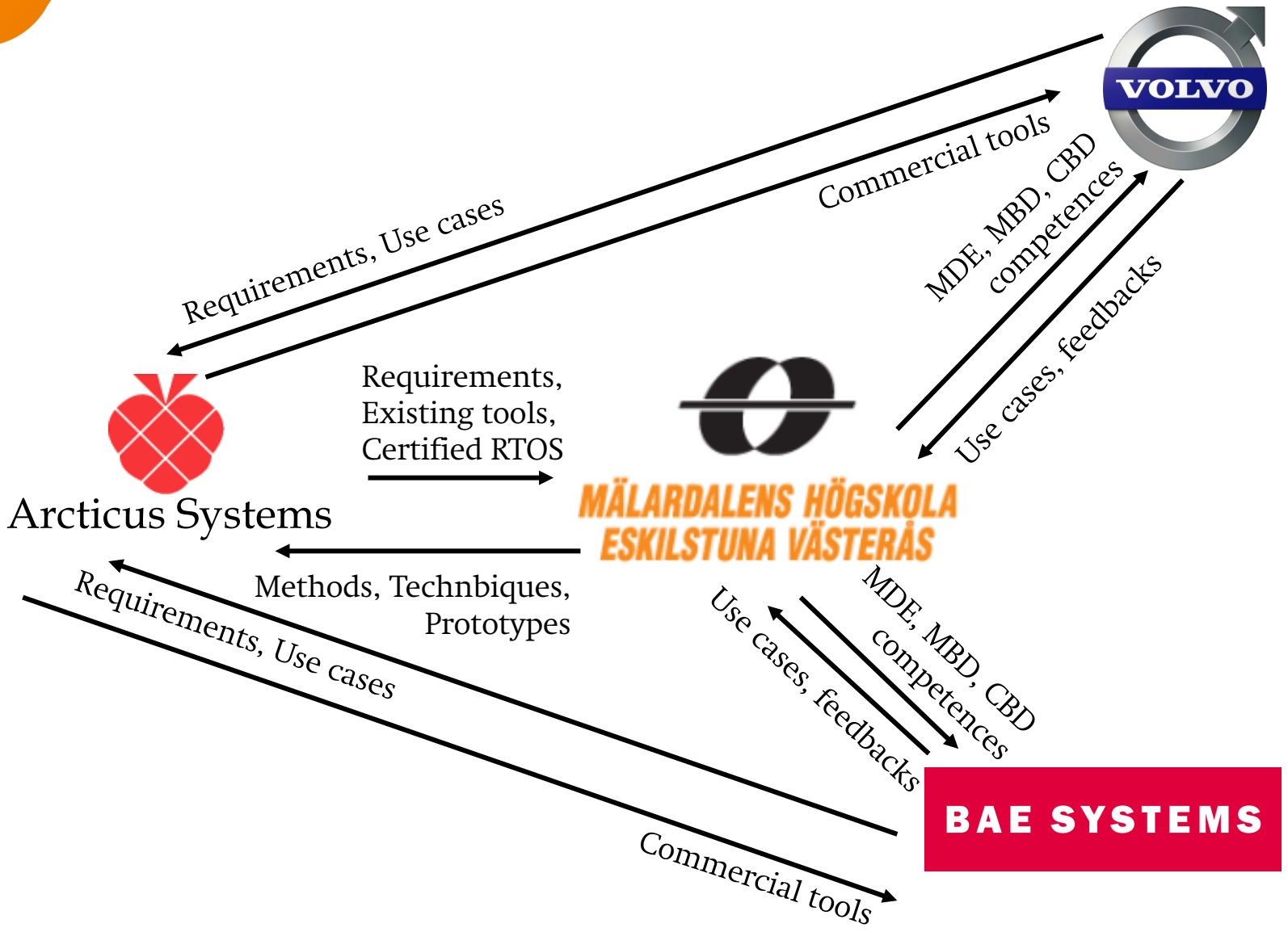

Thank you for the attention!

Questions?